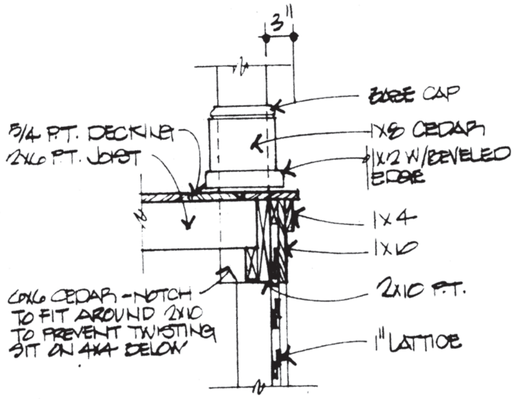

5 ALT. PORCH DETAIL

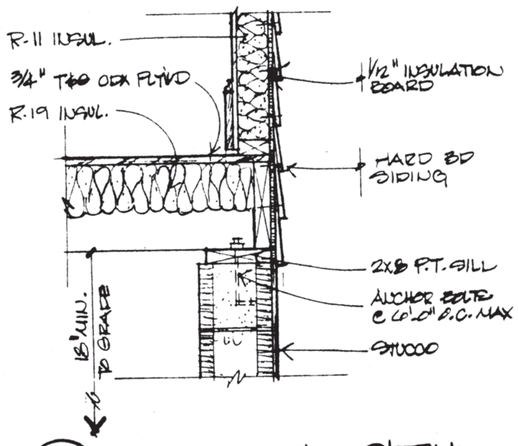

6 TYPICAL FL. DETAIL

* 20" projection shown for fireplace to conform to many local code maximum setback allowances for projections into side yard setbacks. Verify size of selected fireplace unit and flue, adjust accordingly. Build flue with flat studs at center portion if necessary to accommodate flue. Build at 24" if setback is not an issue.

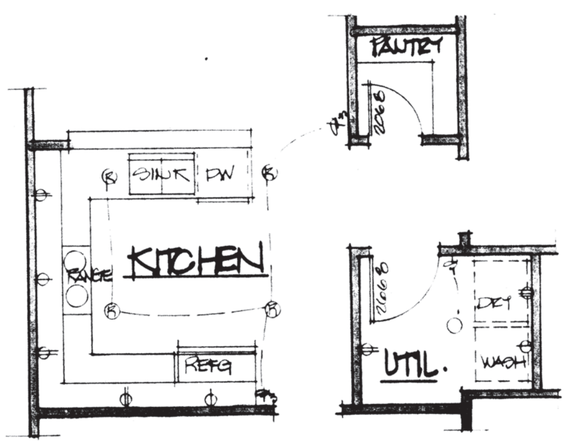

ALT. KITCHEN

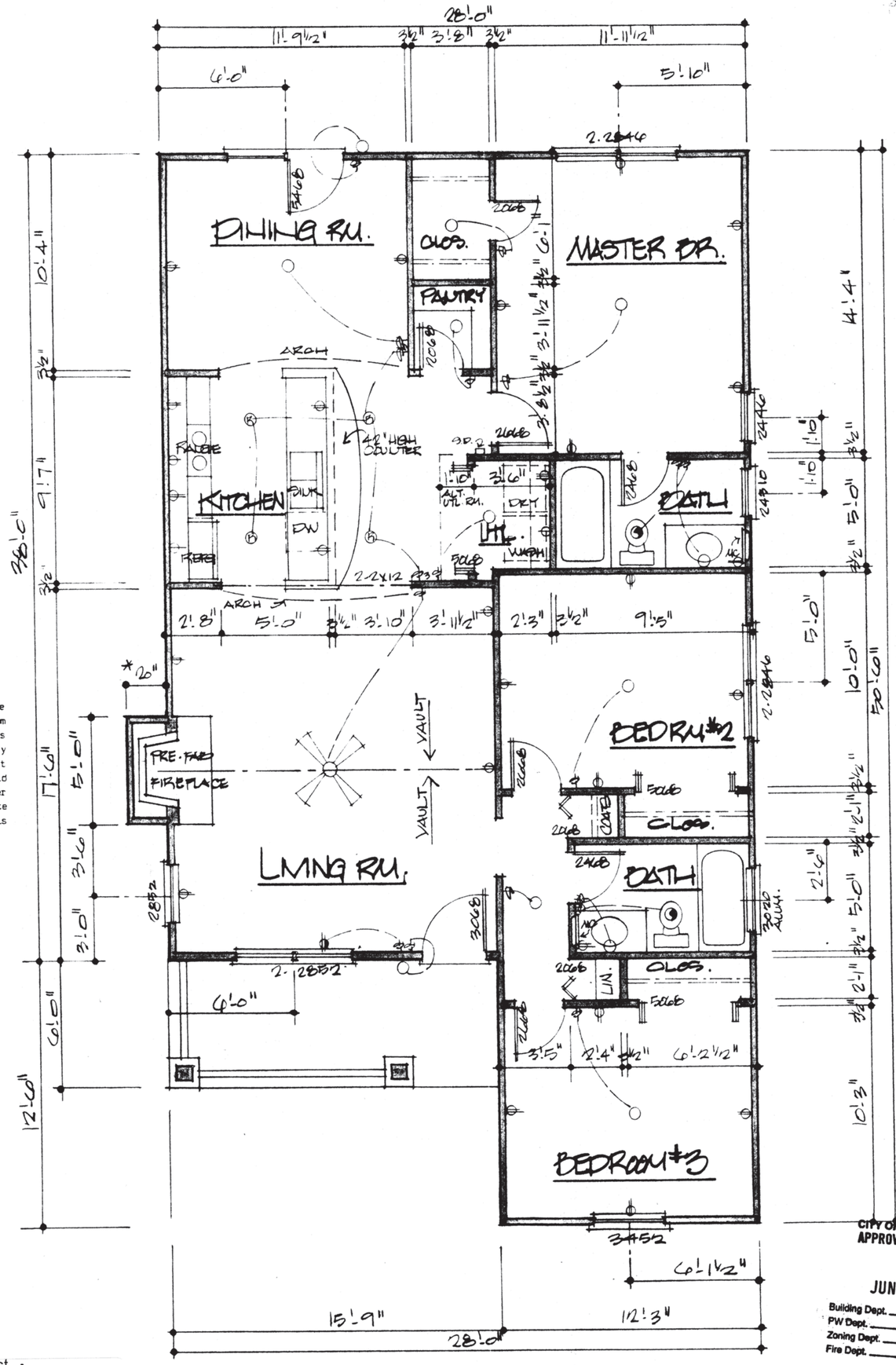

FLOOR PLAN

SCALE 1/4" = 1'-0"

1217 sq.ft.

544 East 21st Avenue

© 1991 Rick Thompson - Architect

By accepting these drawings the owner and contractor agrees to hold harmless the architect against all expenses as a result of any claims against the architect for rendering of architectural services.

It is the responsibility of the purchaser to perform before construction:
1) Verify compliance with local codes.
2) Verify ALL DIMENSIONS.
3) Plans should be engineered for actual load and site conditions. Sizes shown may vary according to your environmental demands and codes.

PLAN NUMBER

1206·A

Rick Thompson
Architect
PO Box 160
Lake Junaluska, North Carolina
828-627-1474

DATE	REVISIONS

SHEET 2 OF 4

CITY OF GULF SHORES
APPROVED FOR PERMIT
JUN 04 1999
Building Dept.
PW Dept.
Zoning Dept.
Fire Dept.